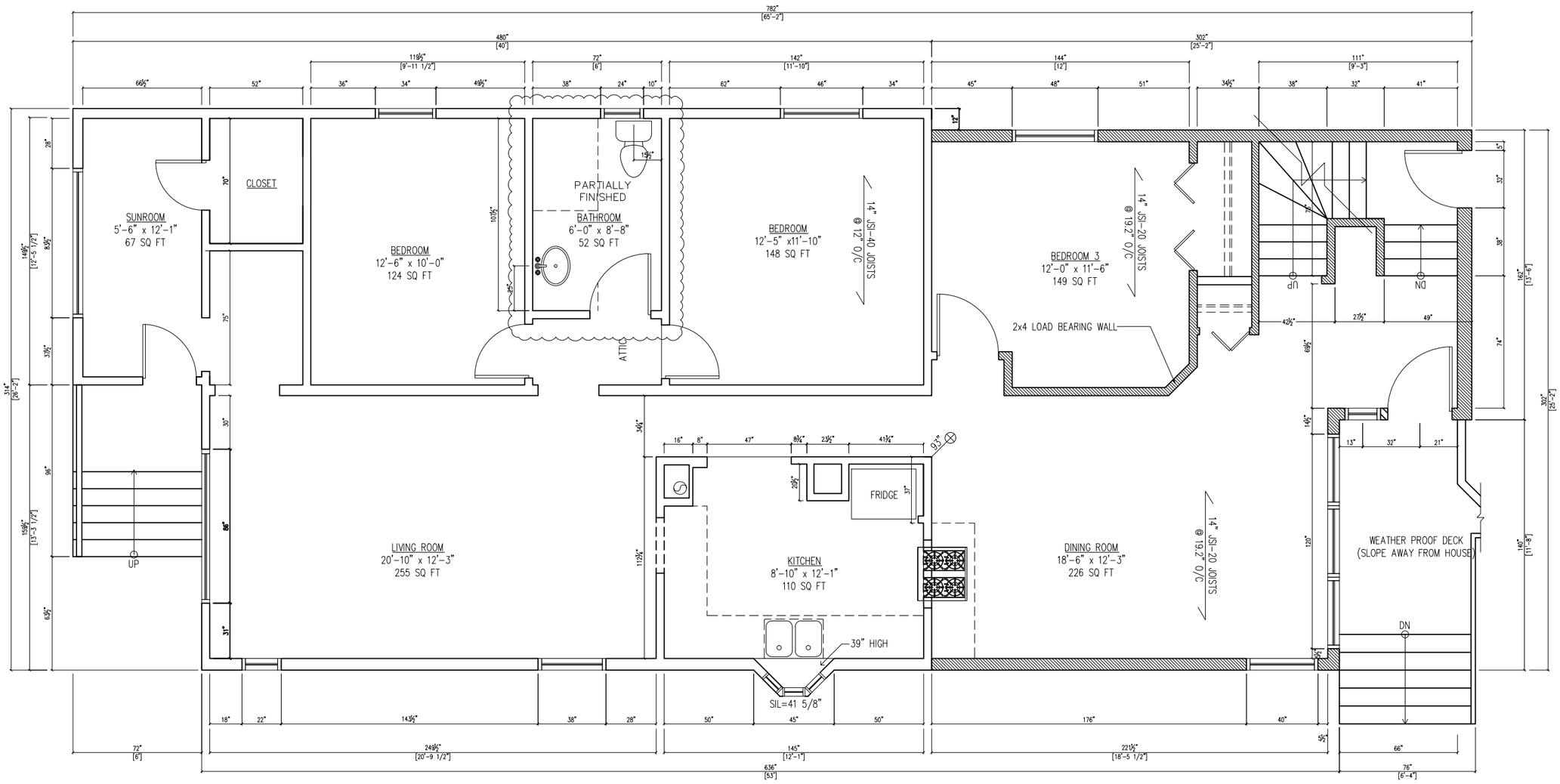
782"
[65'-2"]
480"
[40']
302"
[25'-2"]
SUNROOM
5'-6" x 12'-1"
67 SQ FT
CLOSET
BEDROOM
12'-6" x 10'-0"
124 SQ FT
PARTIALLY
FINISHED
BATHROOM
6'-0" x 8'-8"
52 SQ FT
BEDROOM
12'-5" x11'-10"
148 SQ FT
14" JSI-40 JOISTS
@ 12" O/C
ATTIC
BEDROOM 3
12'-0" x 11'-6"
149 SQ FT
14" JSI-20 JOISTS
@ 19.2" O/C
2x4 LOAD BEARING WALL
UP
DN
LIVING ROOM
20'-10" x 12'-3"
255 SQ FT
KITCHEN
8'-10" x 12'-1"
110 SQ FT
FRIDGE
39" HIGH
SIL=41 5/8"
DINING ROOM
18'-6" x 12'-3"
226 SQ FT
14" JSI-20 JOISTS
@ 19.2" O/C
WEATHER PROOF DECK
(SLOPE AWAY FROM HOUSE)
636"
[53']

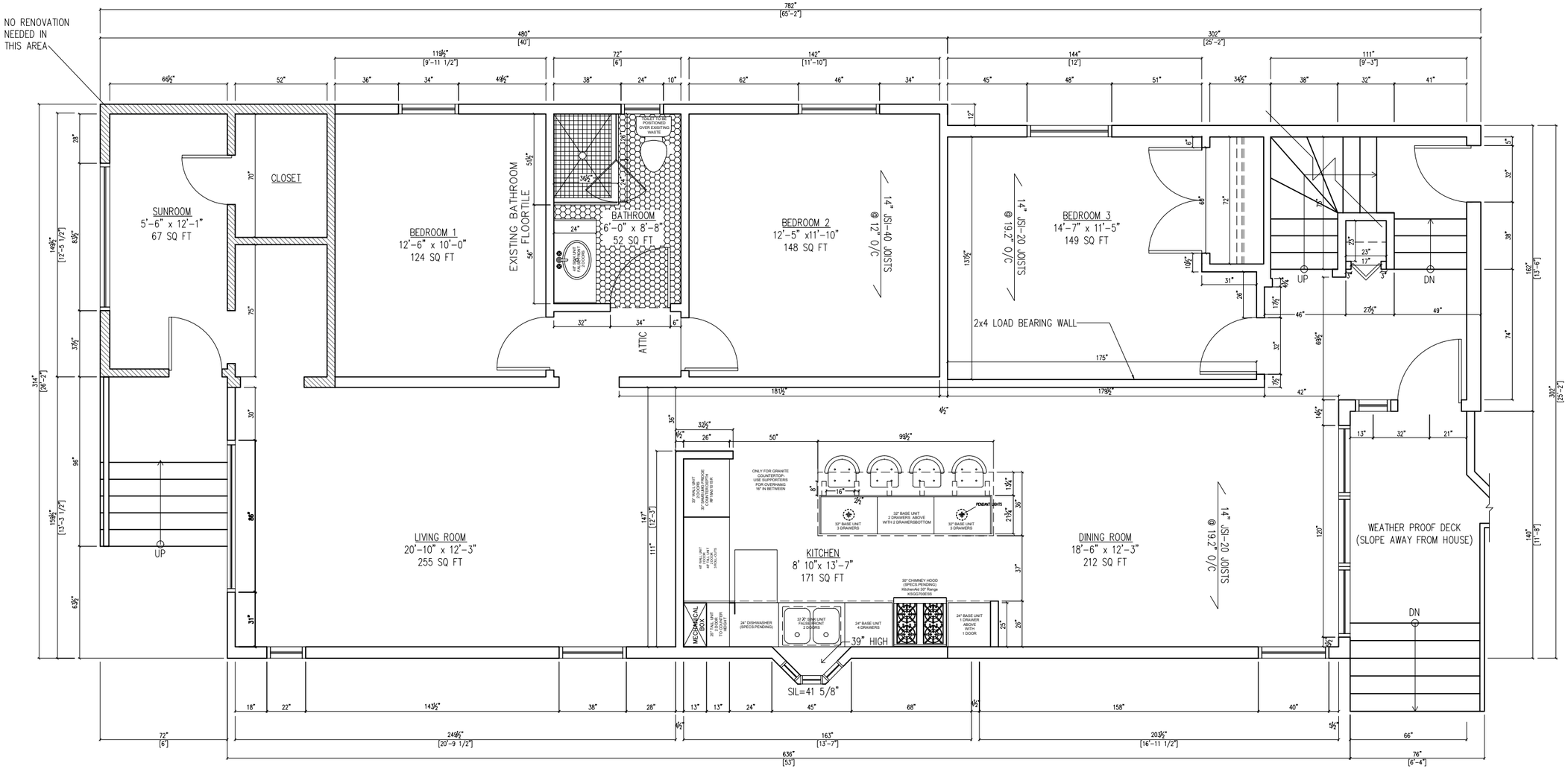
NO RENOVATION NEEDED IN THIS AREA
SUNROOM
5'-6" x 12'-1"
67 SQ FT
CLOSET
BEDROOM 1
12'-6" x 10'-0"
124 SQ FT
EXISTING BATHROOM FLOORTILE
BATHROOM
6'-0" x 8'-8"
52 SQ FT
TOILET TO BE POSITIONED OVER EXISTING WASTE
PE QUILTED DOORS
ATTIC
BEDROOM 2
12'-5" x11'-10"
148 SQ FT
14" JSI-40 JOISTS @ 12" O/C
14" JSI-20 JOISTS @ 19.2" O/C
BEDROOM 3
14'-7" x 11'-5"
149 SQ FT
2x4 LOAD BEARING WALL
UP
DN
LIVING ROOM
20'-10" x 12'-3"
255 SQ FT
UP
KITCHEN
8' 10"x 13'-7"
171 SQ FT
ONLY FOR GRANITE COUNTERTOP- USE SUPPORTERS FOR OVERHANG 16" IN BETWEEN
PENDANT LIGHTS
32" BASE UNIT 3 DRAWERS
32" BASE UNIT 2 DRAWERS ABOVE WITH 2 DRAWERSBOTTOM
30" WALL UNIT DOORS 30" GARBAGE/RECYCLE CONTAINER BF MAKES BR
48" WALL UNIT DOORS 1 DOOR INSULATOR
MECHANICAL BOX
30" FALL UNIT DOORS 1 DOOR TO COUNTER TOP
24" DISHWASHER (SPECS PENDING)
37.2" SINK UNIT FALSE FRONT 2 DRAWS
24" BASE UNIT 4 DRAWERS
30" CHIMNEY HOOD (SPECS PENDING) Kitchenaid 30" Range KSGC730ESS
24" BASE UNIT 1 DRAWER ABOVE WITH 1 DOOR
39" HIGH
SIL=41 5/8"
DINING ROOM
18'-6" x 12'-3"
212 SQ FT
14" JSI-20 JOISTS @ 19.2" O/C
WEATHER PROOF DECK (SLOPE AWAY FROM HOUSE)
DN

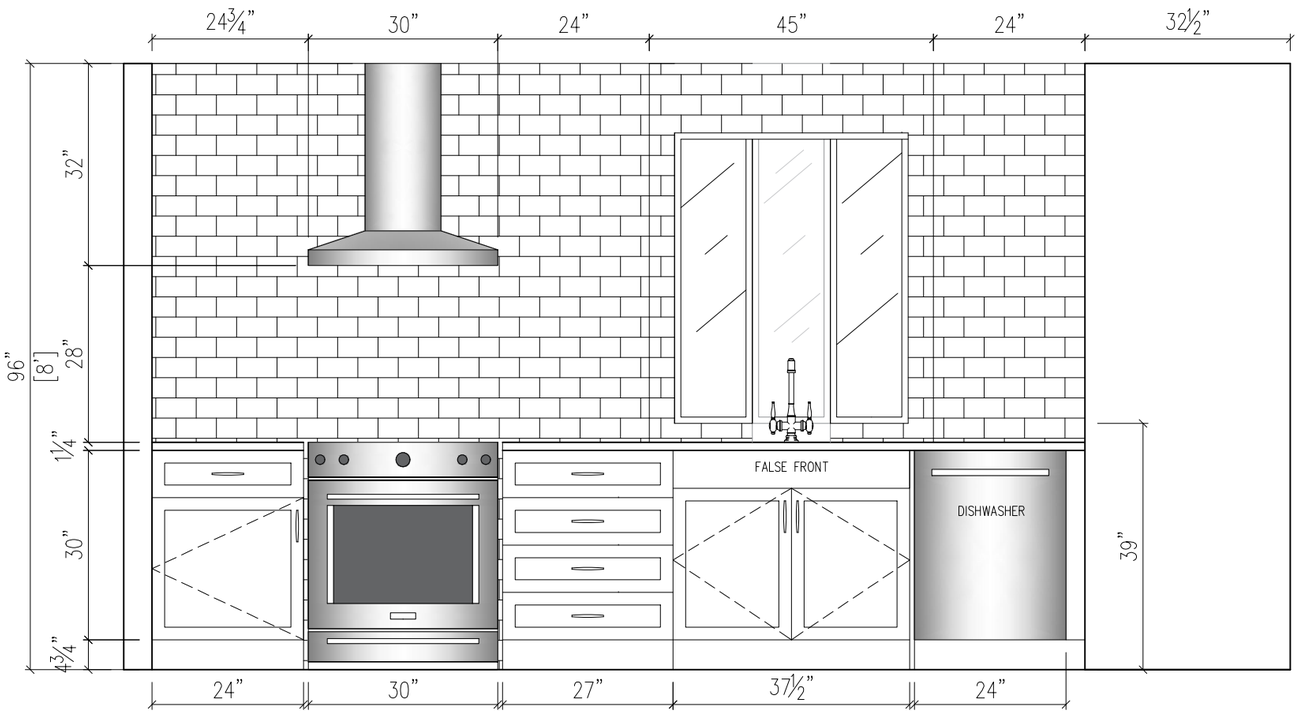
24¾"
30"
24"
45"
24"
32½"
96"
[8']
32"
28"
1¼"
30"
4¾"
FALSE FRONT
DISHWASHER
39"
24"
30"
27"
37½"
24"

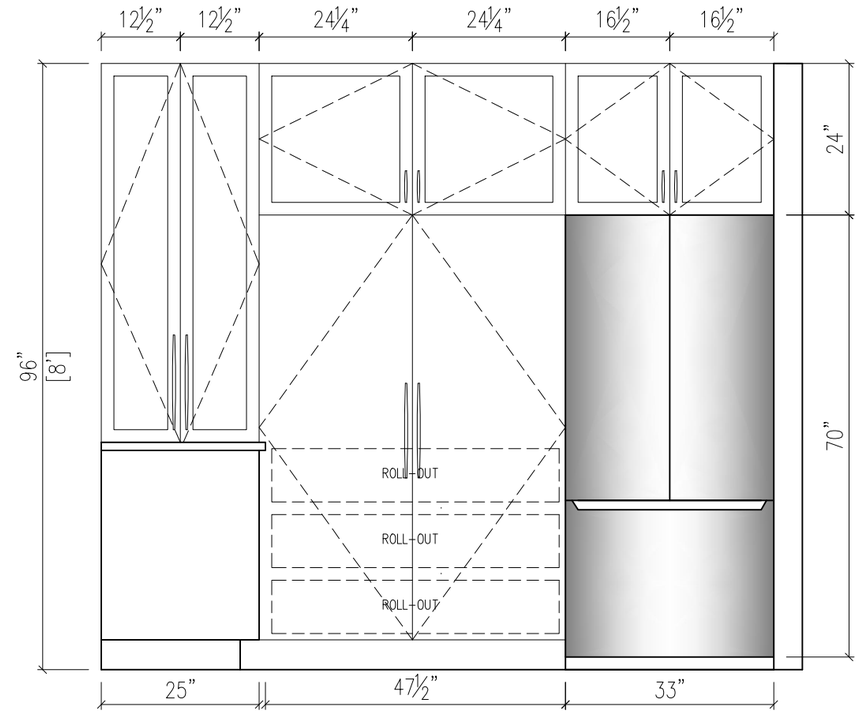
12½"
12½"
24¼"
24¼"
16½"
16½"
96"
[8']
24"
70"
ROLL-OUT
ROLL-OUT
ROLL-OUT
25"
47½"
33"

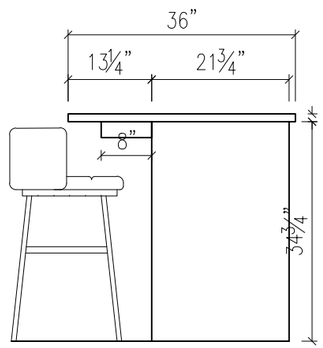
36"
13¼"
21¾"
8"
34¾"

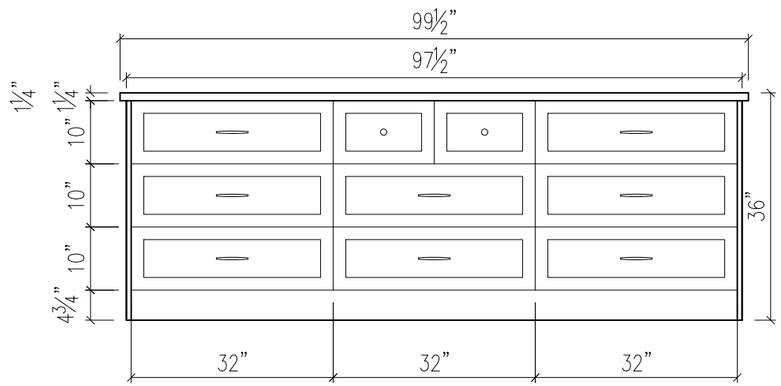
99½"
97½"
1¼"
1¼"
10"
10"
10"
4¾"
36"
32"
32"
32"

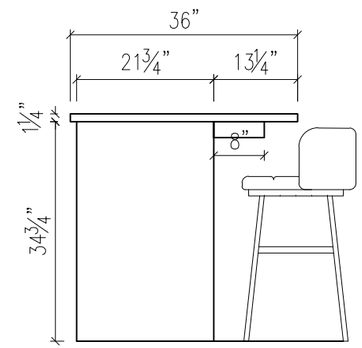
36"
21¾"
13¼"
1¼"
8"
34¾"

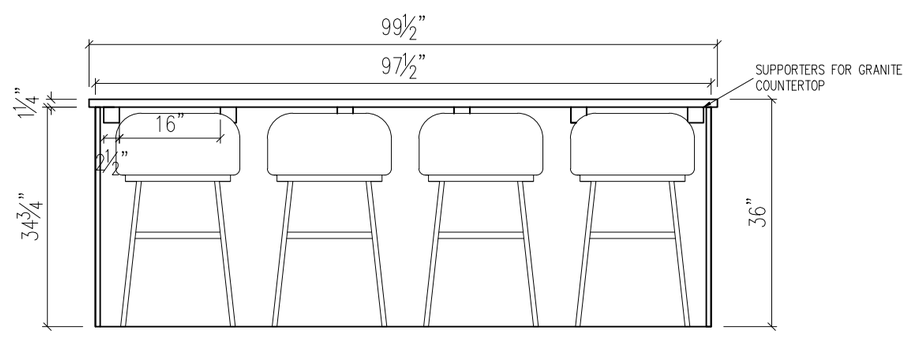
99½"
97½"
SUPPORTERS FOR GRANITE COUNTERTOP
1¼"
16"
2½"
34¾"
36"

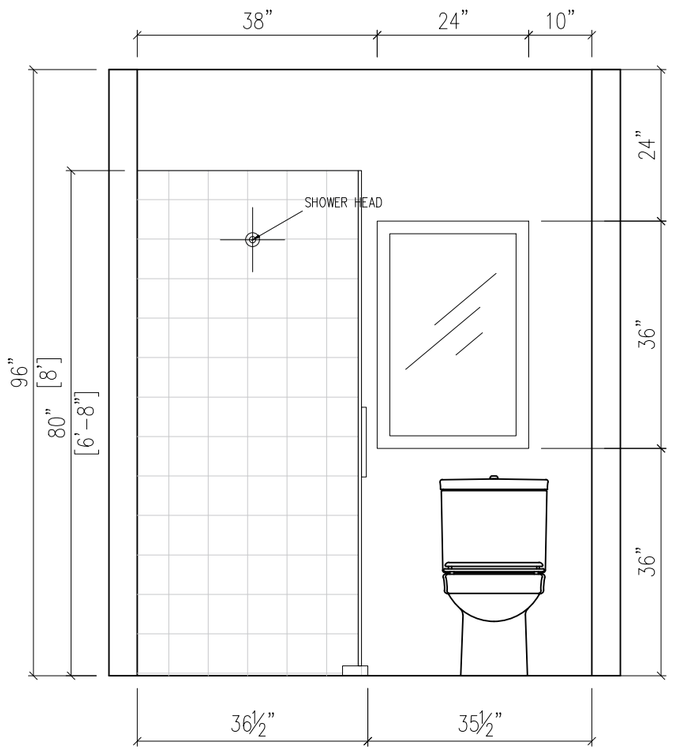
38"
24"
10"
96"
80"
[8']
[6'-8"]
24"
36"
36"
SHOWER HEAD
36½"
35½"

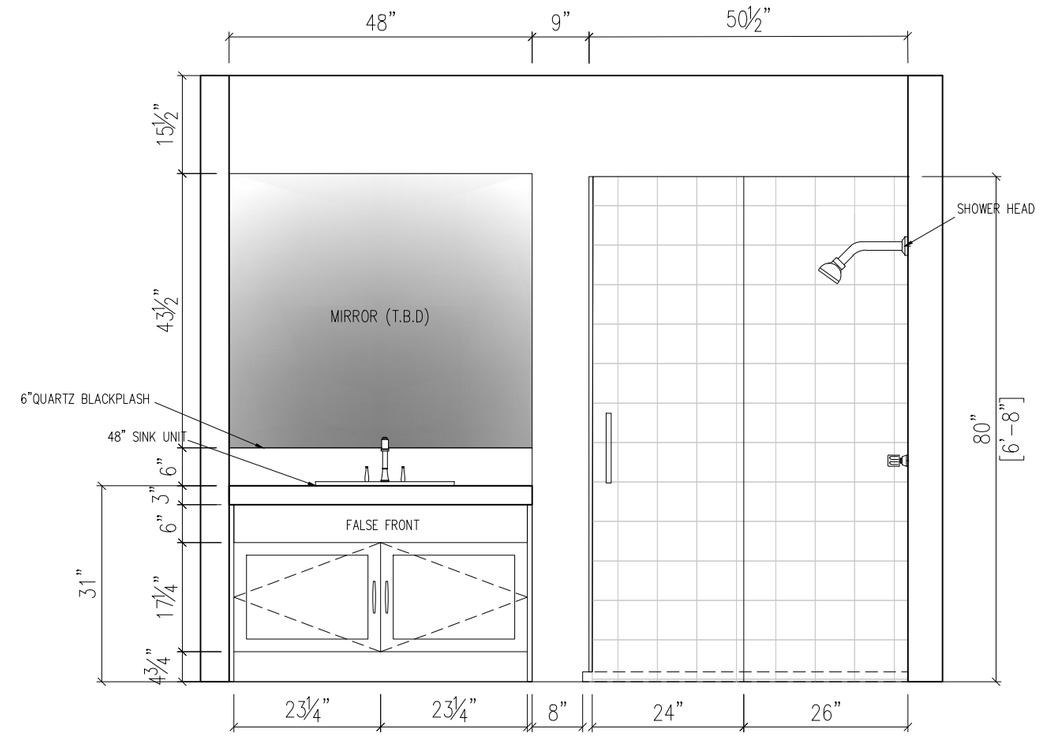
48"
9"
50½"
15½"
43½"
MIRROR (T.B.D)
6"QUARTZ BLACKPLASH
48" SINK UNIT
6"
3"
6"
FALSE FRONT
31"
17¼"
4¾"
SHOWER HEAD
80"
[6'-8"]
23¼"
23¼"
8"
24"
26"